TIME-SERT®

THREAD REPAIR KIT

NAVISTAR DPF M14x1.5 p/n 12-235-03

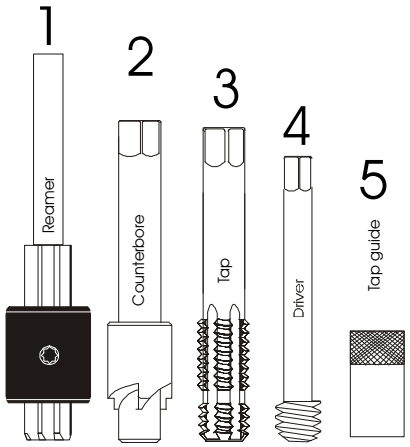

KIT CONTENTS

1. **Reamer** 12-235-03-01
2. **Counterbore** 12-235-03-02
3. **Tap** 12-235-03-03
4. **Driver** 12-235-03-04
5. **Tap guide** 12-235-03-05
6. **Inserts** 12-235-03-06

Use cutting oil for drilling, Counterbore & tapping.

-WARNING-

Cutting tools may shatter if broken. The wearing of safety glasses is required in the vicinity of their use.

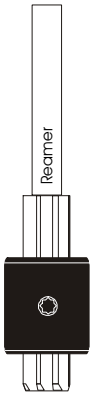

2. REAMER: Using a ½ drill motor ream the hole at a medium speed until the stop collar touches the top of the bung.

Ream hole using cutting oil.

Note:
collar set on reamer .400-.420 inches or 10.1mm-10.6mm from tip of reamer to collar.

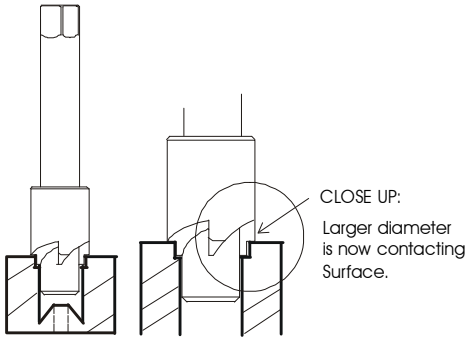

2. COUNTERBORE: the hole to the full depth permitted by the tool. The counterbore tool has 4 cutting teeth and a larger diameter, which is the stop.

When the larger diameter contacts the surface a full 360 degrees this is the full depth.

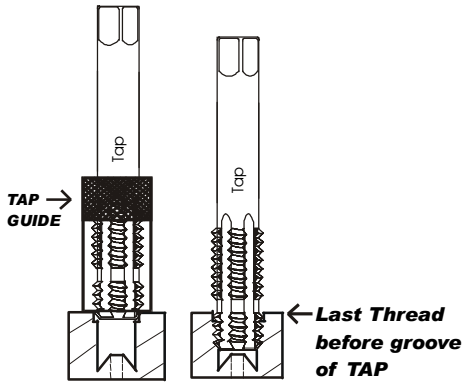

3. TAP HOLE: Use the TAP GUIDE included to ensure the threads are square to surface.

Note: Hold tap guide firmly. Watch that the tap guide remains flush when tapping.

Apply some down pressure as you rotate the tap. After starting the tap in the hole 2 or 3 turns remove the tap guide and STOP when the last thread BEFORE GROOVE is level with top of bung.

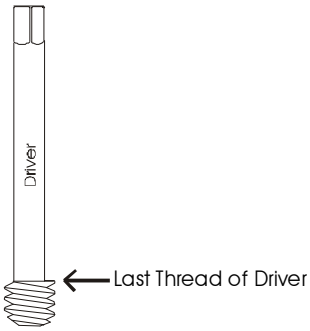

4. DRIVER:
On installation when the last thread of the driver is LEVEL with the surface of the bung this is the STOP depth. This is a visual aid to know where the bottom of the hole is. You do not want to bottom the driver tool out in the hole on installation as this could damage the taper flare at bottom of hole.

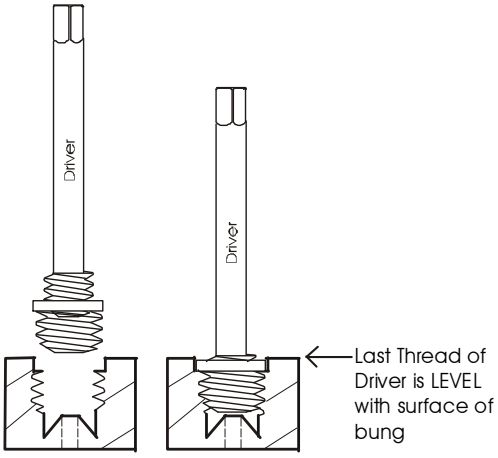

5. INSTALL INSERT: Using a few drops of insert driver oil or 30wt motor oil, Oil the threads of the DRIVER.

Screw an insert onto the Driver and into the prepared hole. When that LAST thread of the driver tool is level with the surface of the bung the insert will be fully expanded and locked in place.

Remove driver repair is complete.